ROYAL Eijkelkamp
Meet the difference

Technical Note
CPT Cone Selection



ROYAL Eijkelkamp
Meet the difference

Technical Note: CPT Cone selection

Introduction

When selecting equipment for a Cone Penetration Testing (CPT) job there is a tendency not to give full consideration to the type of cone used. Often cones are selected based upon what happens to be in the workshop and what is on the shelves of the supplier. Although these are both important, it is perhaps more important to consider the soil type that will be encountered as well as the investigation aims of the project. The CPT cone used can have huge impacts on the resulting data quality and applicability and should therefore be carefully considered. This document breaks down the various elements of the cone and how they can affect the resultant data. Here we will only talk about electrical CPT. However, it is worth pointing out that, although mechanical CPT does provide measures of cone and sleeve resistance, the data from mechanical CPT cannot be directly compared with that of electrical CPT. Therefore, mechanical CPT data cannot be used with correlations that have been developed for electrical cones.



Figure 1: A range of CPT cone penetrometers

Digital vs Analogue

While data from mechanical CPT cannot be directly compared with that of electrical CPT, all electrical cones, whether digital or analogue, are fundamentally the same and the data is directly comparable. All electrical CPT data starts life as analogue readings, that is millivolt readings that result from the strain gauges and transducers housed within the cone body. In an analogue system, these analogue measurements are transmitted to the surface where they are then

converted to digital units. In a digital system, this conversion from analogue to digital data takes place in the cone and digital data is transmitted to surface.

There are several operational benefits of using the digital system. Firstly is the use of universal cables. Unlike analogue CPT, where every measurement parameter needs its own core in the cable (so a 10 pin cable is used for CPT data, while a 16 pin cable is used for seismic CPT), with digital systems universal cables can be used regardless of the data streams generated by extra modules mounted behind the cone. The digital system also allows storage of the calibration file on the cone, eliminating the need for manually adding the latest calibration file to the acquisition software, a potential source of error. Digital CPT is therefore the more future-proof option and, with no obvious drawbacks, is the sensible approach for all getting started with CPT.

To Piezo or not to Piezo?

First introduced in the 1980's; piezocones, CPT cones that can measure the dynamic porewater pressure during penetration, have become more or less the standard CPT cone. Measuring porewater pressure together with the tip resistance and sleeve friction has a range of benefits, including: easier identification, delineation and characterization of soil layers (as the additional parameter allows for more enhanced correlations), evaluation of the flow and consolidation characteristics through dissipation testing and, most importantly, the ability to correct CPT data for pore pressure effects that will affect the CPT data, whether measured or not. For that last reason alone, the use of piezocones is the sensible approach for any CPT job.

It should be noted that a piezocone test, or CPTu as it was originally designated, requires more preparation than a test without pore pressure measurements as the porous filter element must be fully saturated prior to the test to ensure that no air is present within the filter, which can have a hugely detrimental effect on data quality. For tests where the most accurate data possible must be acquired, such as Application Class 1 tests, the fully assembled cone must also be de-aerated to ensure the entire system is completely free of air. However, despite the extra care that must be taken, the benefits of obtaining pore pressure data (and really the necessity of obtaining that data to correct the CPT data) far outweigh the drawbacks.

Piezocones are available with the porous filter element in three locations: u_1 on the tip midface, u_2 at the shoulder and u_3 behind the friction sleeve. The majority of piezocone tests are performed with u_2 cones and these are typically offered as standard. Tests with the u_1 position have the advantage of being the least likely to return negative pore pressures in dilative soils. The u_3 filter position is very seldom used, but is useful for correcting friction sleeve data for pore pressure effects and is normally performed only on research projects. Converting a u_2 cone to a u_1 cone is very simple as it only involves the replacement of the cone tip. A u_3 cone on the other hand requires different cone internals and therefore cannot a u_2 cone cannot be converted to a u3 cone very easily.

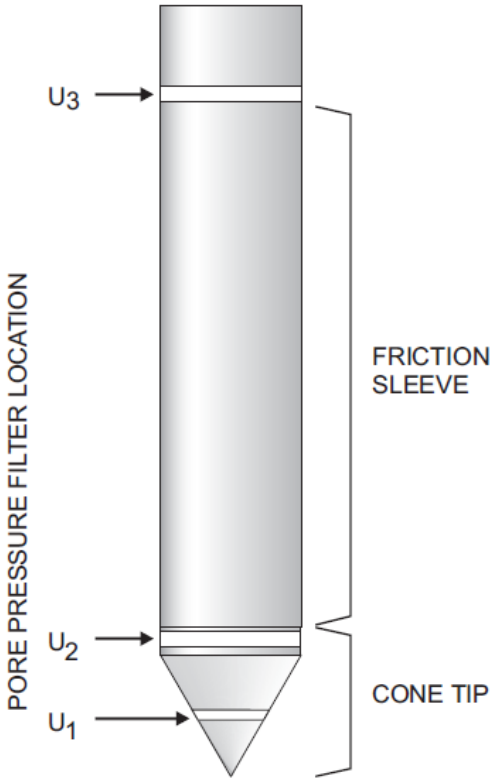

Figure 2: Filter locations
Image source: ASTM D5778

Porous filters can be made out of plastic, such as HDPE, or from metal; most commonly brass or bronze, but also steel. Plastic filters are single use whereas, if undamaged, metal filters can be cleaned, re-saturated and reused.

Rather than porous filters, cones are also available with slot filters. The slot filter has an internal cavity which is filled with a thick grease and when the cone is fully assembled a narrow gap, or slot, exists, so the pore pressure can be transferred through the grease to the pressure transducer. Slot filter elements are less dynamic in their response than porous filter elements, but do have the advantage that they are less likely to desaturate in dry or dilative soils due to the thick grease used. However, in most situations this advantage does not outweigh the less dynamic response (resulting in less representative data acquired) and therefore porous filter elements are much more common in use than slot filters.



Figure 3: Various filter elements

Loadcell Arrangement

Cones are broadly available in two types or loadcell arrangements: subtraction or compression. A subtraction cone contains one solid loadcell with two strain gauges: the bottom strain gauge measures only the cone tip resistance and the top strain gauge the cone tip resistance and the sleeve friction combined. To determine sleeve friction the readings of bottom strain gauge must therefore be subtracted from the top strain gauge.

A compression cone differs in that it contains two separate loadcells: a large, solid, internal loadcell for measuring the cone tip resistance, and a thin-walled, hollow loadcell for measuring the sleeve friction. The loadcell for measuring sleeve friction is therefore of a smaller area and will be more sensitive to small strains. A compression cone is so named as the load cells experience compression during penetration. This in contrast to a tension cone, the third type, in which the load cell arrangement for measuring the sleeve friction results in tension during penetration. Tension cones are however seldom, if ever, used today.

So which to use? Sleeve friction tends to be a much smaller measurement than cone tip resistance, as typical friction ratios are between 10 and 0.1 %. It therefore follows that measuring sleeve friction on a loadcell designed to have greater sensitivity at small strains will give a more accurate measurement of sleeve friction. Error or inaccuracy of a load cell tends to be approximately 0.5% of its full scale output (FSO), hence load cells with larger FSOs will have larger errors. Thus measuring a very small reading on a loadcell with an large FSO (so that the range covers the cone tip resistance) will easily result in a situation where the reading is close to or even smaller than the inherent error in the reading.

Compression cones are therefore recommended on projects where accurate sleeve friction readings, particularly in very soft materials, are required or on projects where Application Class 1 data is required. However, due to the delicate nature of the sleeve friction loadcell it is easier to overload a compression cone or push it to a point that it requires recalibration. So for projects where very stiff materials will be encountered or where production is more important than sensitivity, subtraction cones tend to be favored. It must, however, be noted that careful maintenance and proper operation can avoid a lot of the most commonly encountered compression cone overload.

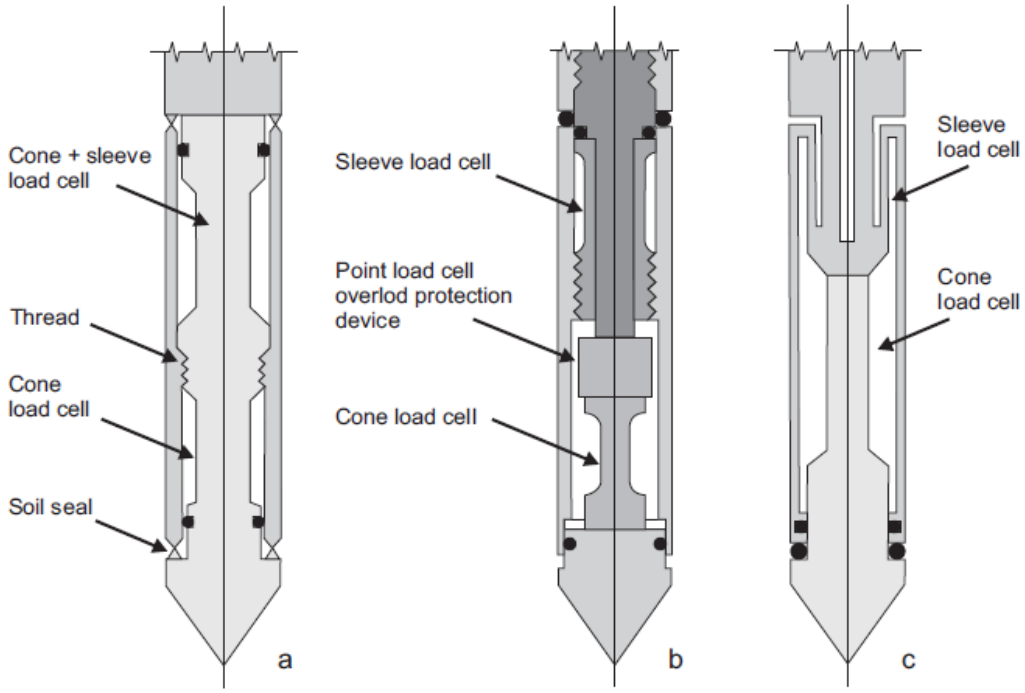

Figure 4: CPT cone loadcell arrangements: a) Subtraction b) Compression c) Tension
Image source: ASTM D5778

Loadcell Ranges

Typically CPT cones are designed to work in a range of soils, up to and including very stiff soils where upwards of 50 MPa (522 tsf) cone tip resistances may be encountered and therefore these cones are capable of measuring 75 Mpa (783 tsf) or even 100 MPa (1044 tsf) without being overloaded. However, when testing in predominately soft soils with such a cone it is possible to work only in the bottom 10 or even few % of a cone's working range and therefore it does not always make sense to use such a high capacity tool. Cones with smaller load cell ranges are more sensitive to small strains and are therefore more accurate in very soft soils.

Even if not offered as standard, cones with smaller measuring ranges are typically available and are a valuable tool in ensuring the most accurate and sensitive data possible when working at small strains, like those encountered in very soft, sensitive soils, such as marine deposits.

Cone Size

CPT cones are sold in a variety of sizes, however the vast majority are 10 cm^2 or 15 cm^2, with the former being considered by ISO and ASTM as the standard, but the latter being the most commonly used. It should be noted that the size refers to the cross-sectional area of the cone tip, not surface area.

A 15 cm^2 cone can be referred to as oversized as its 44 mm (1.75 in) diameter is larger than the commonly used 36 mm CPT rods and the 10 cm^2 cone, which also has a 36 mm (1.42 in) diameter. The larger diameter is advantageous as it very effectively reduces friction on the rod string and thus reduces the pushing force required to get to a particular depth compared to a 10 cm^2 cone, even if that smaller cone is pushed with a friction reducer. Another advantage of a

15 cm^2 cone is that due to its larger size it is more able to be pushed through (very) course material, such as gravel, than a smaller cone.

A disadvantage of a larger cone is the larger zone of influence in the soil compared to a smaller cone. Since the measured cone tip resistance is influenced by the soil immediately above and below the cone tip (with the thickness a function of the cone diameter), a smaller zone of influence in the soil and is possibly able to better delineate narrow soil layers. However, for most applications a 15 cm^2 cone still adequate to define the soil stratigraphy.

As mentioned before, cones with smaller load cells are more sensitive to small strains. Although it may seem counter intuitive, increasing cone size can also increase sensitivity to small strains. By increasing the surface area, the force imparted by the soil on the cone tip increases and improves the chances that a detectable force is observed in the softest soils. It is for this reason that 40 cm^2 cones were deployed in offshore environments, where incredibly soft marine deposits needed to be analyzed. However, modern 10 and 15 cm^2 cones are able to detect changes in soil properties in even the softest soils, especially when cones with smaller load cell ranges are used.

Also available are mini cones, typically 5 cm^2 and 2 cm^2 in size. These mini cones are often deployed by lightweight seabed CPT systems as they can be pushed on thinner CPT rods, which can be coiled on a spool and require less reaction force to be pushed into the ground, hence making them perfect for a lightweight system. Mini cones are also used in laboratory settings and calibration chambers.



Figure 5: CPT cones ranging in size from 15 cm^2 to 2 cm^2

Add-on Modules

Add-on modules are a cost and time effective way to expand the data acquired during CPT. These modules can be added to the back of the cone to acquire an extra data set with no impact on the quality of the standard CPT data. Such data increases the applications of CPT, e.g., by adding environmental and hydrogeological applications to the existing geotechnical applications. We will not go into great detail on the modules in this document, other than to introduce the concept and some of the modules currently available. For more information on these modules, refer to our website. Available modules include:

- Seismic: for determination of the shear and compression wave velocity profile as a function of depth allowing for detailed analysis of small strain shear and elastic moduli as well as the soil liquefaction potential
- Magnetometer: for detection of buried metal objects such as UXO as well bottoms of piles
- Video cone: for visual analysis of soil and identification of contaminants
- Gamma module: for assessment of radioactive signature of soil



Figure 6: CPT add-on modules

Summary

CPT cones come in a variety of types and configurations, the selection of which can have a significant impact on the quality and applicability of the acquired data. At Royal Eijkelkamp it is our goal that our customers are equipped with not only reliable equipment, but also with the correct tools for the job at hand. If you would like more information on any of the topics raised in this document or any aspect of Cone Penetration Testing, then please get in touch with one of our CPT experts on CPT@eijkelkamp.com.

Royal Eijkelkamp is a provider of a full range of Cone Penetration equipment: mechanical, electrical and sonic CPT. For more information about these products please visit our website.